DWG NO 127-6979A SH 1 REV

PROPRIETARY AND CONFIDENTIAL

THE INFORMATION CONTAINED IN THIS DRAWING IS THE SOLE PROPERTY OF DYTRAN INSTRUMENTS INC. ANY REPRODUCTION IN PART OR AS A WHOLE WITHOUT THE WRITTEN PERMISSION OF DYTRAN INSTRUMENTS INC. IS PROHIBITED

REVISIONS

REV	ECN	DESCRIPTION	BY/DATE	CHK	APPR
D	13553	ADD FLAG NOTE 7	EP 07/07/17	LN	MH
E	15643	RE-DESIGN WITH CERAMIC HEADER	DP 03/17/20	EP	LN

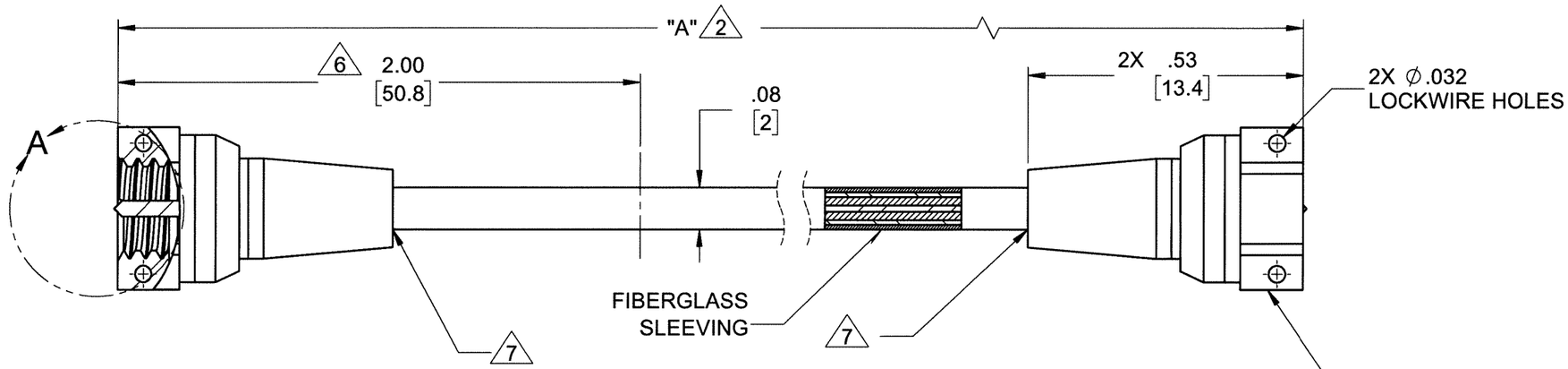

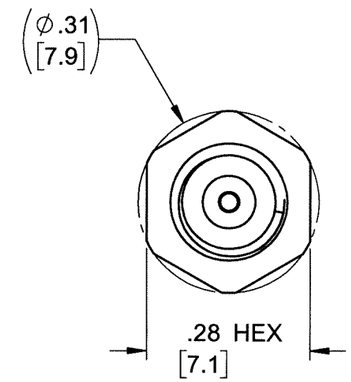

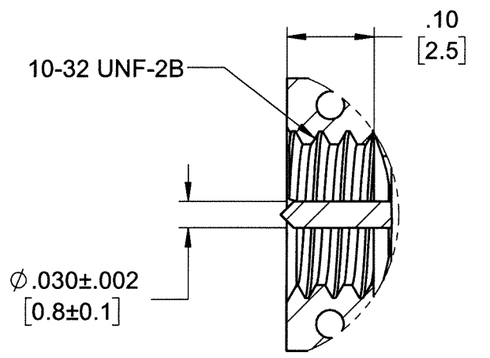

DETAIL A
SCALE 6 : 1

MATERIALS	
JACKET	304L SS
NUT	304L SS
STRAIN RELIEF	304L SS
PIN	304L SS
CABLE INSULATOR	SILICON DIOXIDE
CONNECTOR INSULATOR	MACOR
SLEEVING	FIBERGLASS

MODEL NUMBER	DIM A
6979A1.7	20.0±.5 (1.7 FT)
6979A03	36.0±1.0 (3 FT)
6979A05	60.0±3.0 (5 FT)
6979A08	96.0 ±3.0 (8 FT)
6979A10	120.0±3.0 (10 FT)
6979A15	180.0±5.0 (15 FT)
6979A20	240.0±6.0 (20 FT)
6979A30	360.0±6.0 (30 FT)

7 DO NOT PULL FIBERGLASS SLEEVE. FIBERGLASS SLEEVE MAY RETRACT FROM POSITION.

6 DO NOT BEND CABLE WITHIN SECTION INDICATED ON BOTH ENDS OF CABLE.
DO NOT BEND CABLE WHILE INSTALLED.

5. WEIGHT: 2.5GRAMS PER FOOT APPROX.
4. MAXIMUM TORQUE: 12 LB-INCH.
3. MAXIMUM BEND RADIUS: 1.4 INCH.
2. CABLE LENGTH IS VARIABLE AND DESIGNATED AS LAST 2 DIGITS OF MODEL NUMBER.
EXAMPLE: 6979A10 IS 10 FEET LONG.
1. MAXIMUM TEMPERATURE: 1200°F.

NOTES: UNLESS OTHERWISE SPECIFIED

UNLESS OTHERWISE SPECIFIED:
INTERPRET DIM & TOL PER ASME Y14.5M - 1994.
REMOVE BURRS.
COUNTERSINK INTERNAL THDS 90° TO MAJOR DIA.
CHAM EXT THDS 45° TO MINOR DIA.
THD LENGTHS AND DEPTHS ARE FOR MIN FULL THDS.
DIMENSIONS APPLY AFTER FINISHING.

ALL MACHINED SURFACES.
TOTAL RUNOUT WITHIN .005.
BREAK SHARP EDGES .005 TO .010.
MACHINED FILLET RADII .005 TO .015.
WELDING SYMBOLS PER AWS A2.4.
ABBREVIATIONS PER MIL-STD-12.

UNLESS OTHERWISE SPECIFIED:
DIMENSIONS ARE IN INCHES.
DIMENSIONS IN BRACKETS [ ] ARE IN MILLIMETERS TOLERANCES ARE:

DECIMALS	METRIC	ANGLES
.XX ±.03	.X ± 0.8	±1°
.XXX ±.010	.XX ±0.25	

APPROVALS		DATE
ORIG	RT	05/26/11
CHK	RA	06/14/11
APP	DV	07/27/11

DO NOT SCALE DRAWING

THIRD ANGLE PROJECTION USA

DYTRAN INSTRUMENTS, INC. Chatsworth, CA

MASTER ONLY IF IN RED

TITLE: OUTLINE/INSTALLATION DWG, HARDLINE CABLE ASSY, INSULATED, MODEL 6979A

SIZE	CAGE CODE	DWG NO	REV
B	2W033	127-6979A	E

SCALE: 4:1 SHEET 1 OF 1

172-0186 REV A